flos

FS K H

: fiche produit

La collection Flos propose des si ges extr mement confortables avec une large gamme de bases : en m tal, en bois, sur roulettes, basses, hautes et bancs. Elle est parfaite pour les bureaux et les lieux de travail domestiques.

design:
Tomasz Augustyniak

must have

Site du produit
lien vers le site

bejot:

dimensions

FS K H

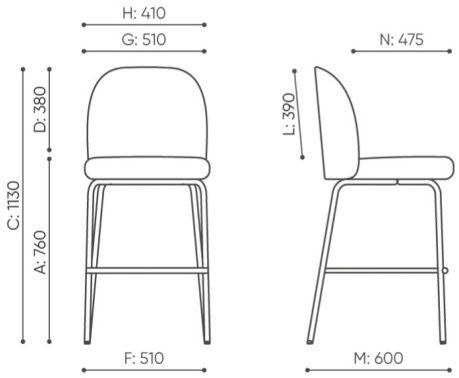

FS K H

A seat height: overall dimensions

B seat height: measured according to the norm PN EN 1335 – 1

C chair height

D backrest height

E headrest height

F dimensional width chair / base

G seat width

H backrest width

I width between armrests

K height from the floor to the armrest

L backrest lenght

M dimensional chair depth

N seat depth / seat lenght

Dimensions are approximate and may vary depending on the selected product configuration. The requirements of the standard are always met.

bejot:flos

mat riaux disponibles pour la collection

1st price group	Fenno, Keimo
2nd price group	Alaska, Alpa, Charles, Charles - Studio Design, Cura, Pastel, Roccia
3rd price group	Ally, Ally SD, Alpa-Studio Design, Blazer, Cura SD, Cyber SD, Oceanic, Silvertex , Silvertex - Studio Design, Synergy, Synergy - Studio Design
4th price group	Heritage, Oceanic-Studio Design, Remix - Studio Design
5th price group	Accessoire, Steelcut Trio 3
Cuir	Leather
Metal	Metal - powder coated