nubi

NB SC 12 / 18

: fiche produit

Nubi est une s rie intemporelle et originale de meubles qui se r f re au style mid-century. Elle se caract rise par ses formes organiques et douces aux bords arrondis, qui donnent de la l g ret et de l' l gance aux int rieurs.

La collection est compos e de canap s et de poufs tr s confortables ainsi que de parois acoustiques circulaires.

design:
Weronika Politowicz

Site du produit
lien vers le site

bejot:

dimensions

NB SC 12 / 18

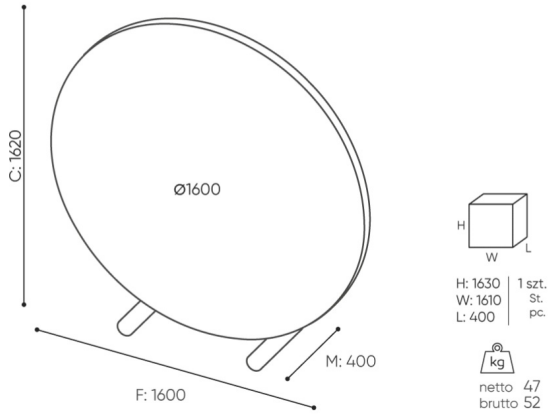

NB SC 16

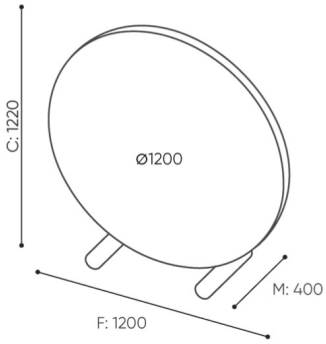

NB SC 12

A seat height: overall dimensions

B seat height

C chair height: overall dimensions

D backrest height

F chair width: overall dimensions

G seat width

H backrest width

K height from the floor to the armrest

M chair depth: overall dimensions

N seat depth / seat lenght

Dimensions are approximate and may vary depending on the selected product configuration. The requirements of the standard are always met.

bejot:nubi

mat riaux disponibles pour la collection

1st price group	Fenno
2nd price group	Alaska, Alpa, Charles, Charles - Studio Design, Cura, Roccia
3rd price group	Ally, Ally SD, Alpa-Studio Design, Blazer, Cura SD, Cyber SD, Synergy, Synergy - Studio Design
4th price group	Heritage, Remix - Studio Design
5th price group	Accessoire, Steelcut Trio 3
Wood	Solid oak wood, Solid oak wood - clear varnish matt
Metal	Metal - powder coated