offre be:basic

SK H be:basic

: fiche produit

Produits retir s de l'offre avec des d lais de livraison prolong s.
Disponibles uniquement dans la limite des stocks disponibles.

design:

Site du produit
lien vers le site

bejot:

dimensions

SK H be:basic

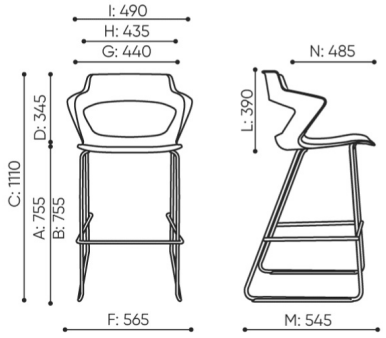

H: 1290 W: 640 L: 680	1 szt. St. pc.
H: 1290 W: 640 L: 680	2 szt. St. pc.
H: 1290 W: 640 L: 680	3 szt. St. pc.

kg

netto 8
brutto 11

SK H 1N

A	seat height: overall dimensions
B	seat height: measured according to the norm PN EN 1335 – 1
C	chair height
D	backrest height
E	headrest height
F	dimensional width chair / base
G	seat width
H	backrest width
I	width between armrests
K	height from the floor to the armrest
L	backrest lenght
M	dimensional chair depth
N	seat depth / seat lenght

Dimensions are approximate and may vary depending on the selected product configuration. The requirements of the standard are always met.

mat riaux disponibles pour la collection

1st price group	Bond, Fenno, Keimo, Sawana
2nd price group	Alaska, Alpa, Charles, Charles - Studio Design, Cura, Era - Studio Design, Pastel, Roccia, Valencia
3rd price group	Ally, Ally SD, Alpa-Studio Design, Blazer, Cura SD, Oceanic, Silvertex , Silvertex - Studio Design, Synergy, Synergy - Studio Design, Valencia - Studio Design
4th price group	Heritage, Oceanic-Studio Design, Remix - Studio Design
5th price group	Accessoire, Steelcut Trio 3
Cuir	Leather
Wood	Solid oak wood
Plastic	Plastic Sky_Line