vieni

VE 203

: fiche produit

Un fauteuil l gant offrant un confort exceptionnel. Le design italien particulier se manifeste dans les moindres d tails.
Il s'int gre parfaitement dans les int rieurs publics modernes, les habitations et les espaces confortables de type lounge. C'est une collection qui invite au repos et la d tente.

design:
Edi & Paolo Ciani

Site du produit
lien vers le site

bejot:

dimensions

VE 203

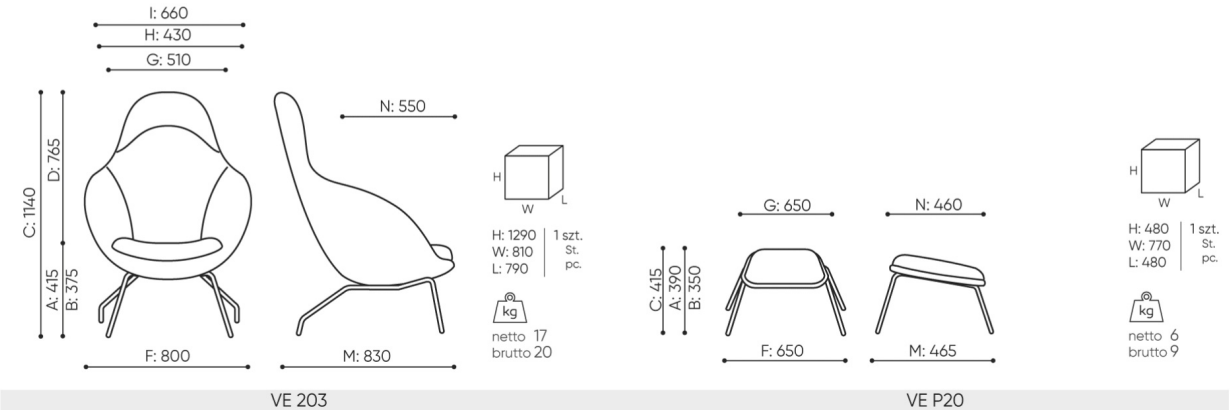

A seat height: overall dimensions

B seat height: measured according to the norm PN EN 1335 – 1

C chair height

D backrest height

E headrest height

F dimensional width chair / base

G seat width

H backrest width

I width between armrests

K height from the floor to the armrest

L backrest lenght

M dimensional chair depth

N seat depth / seat lenght

Dimensions are approximate and may vary depending on the selected product configuration. The requirements of the standard are always met.

bejot:vieni

mat riaux disponibles pour la collection

1st price group	Fenno
2nd price group	Alaska, Alpa, Charles, Charles - Studio Design, Cura, Pastel, Roccia, Valencia
3rd price group	Ally, Ally SD, Alpa-Studio Design, Blazer, Cura SD, Cyber SD, Oceanic, Silvertex , Silvertex - Studio Design, Synergy, Synergy - Studio Design, Valencia - Studio Design
4th price group	Heritage, Oceanic-Studio Design, Remix - Studio Design
5th price group	Accessoire, Steelcut Trio 3
Cuir	Leather
Wood	Solid oak wood
Metal	Metal - powder coated