woodbe

WB 871

: fiche produit

Les chaises, les hockers et les bancs en ch ne massif dot s d'un si ge rembourr . La collection Woodbe combine le minimalisme, la fonctionnalit et l'amour pour les mat riaux naturels.
La structure des meubles est compos e de formes g om triques simples et originales, avec un patin caract ristique au niveau de la base.

design:
Włodzimierz Orsztynowicz

Site du produit
lien vers le site

bejot:

dimensions

WB 871

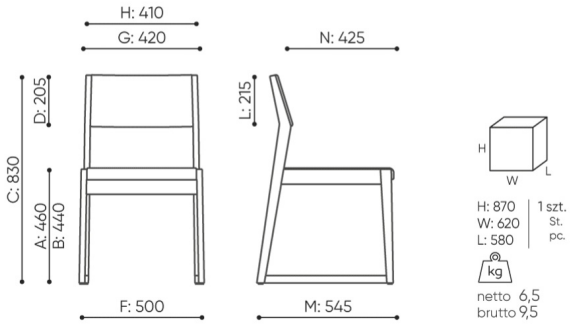

WB 871

A seat height: overall dimensions

B seat height: measured according to the norm PN EN 1335 – 1

C chair height

D backrest height

E headrest height

F dimensional width chair / base

G seat width

H backrest width

I width between armrests

K height from the floor to the armrest

L backrest lenght

M dimensional chair depth

N seat depth / seat lenght

Dimensions are approximate and may vary depending on the selected product configuration. The requirements of the standard are always met.

bejot:woodbe

mat riaux disponibles pour la collection

1st price group	Bond, Keimo, Sawana
2nd price group	Alaska, Alpa, Charles, Charles - Studio Design, Cura, Pastel, Roccia, Valencia
3rd price group	Ally, Ally SD, Alpa-Studio Design, Blazer, Cura SD, Oceanic, Silvertex , Silvertex - Studio Design, Synergy, Synergy - Studio Design, Valencia - Studio Design
4th price group	Heritage, Oceanic-Studio Design, Remix - Studio Design
5th price group	Steelcut Trio 3
Cuir	Leather
Wood	Solid oak wood - clear varnish matt